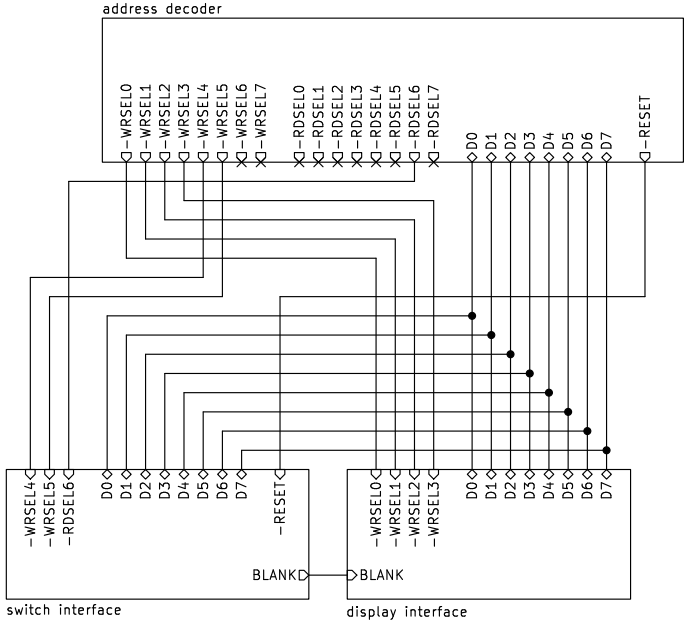

Zacchaeus Microcomputer

Pozsar Zsolt

Sheet: /

File: pman-if.kicad_sch

Title: PMAN-IF - Manual control panel interface module

Size: A4	Date: 2026-03-27	**Rev: 1.0**
KiCad E.D.A. 9.0.6		Id: 1/4

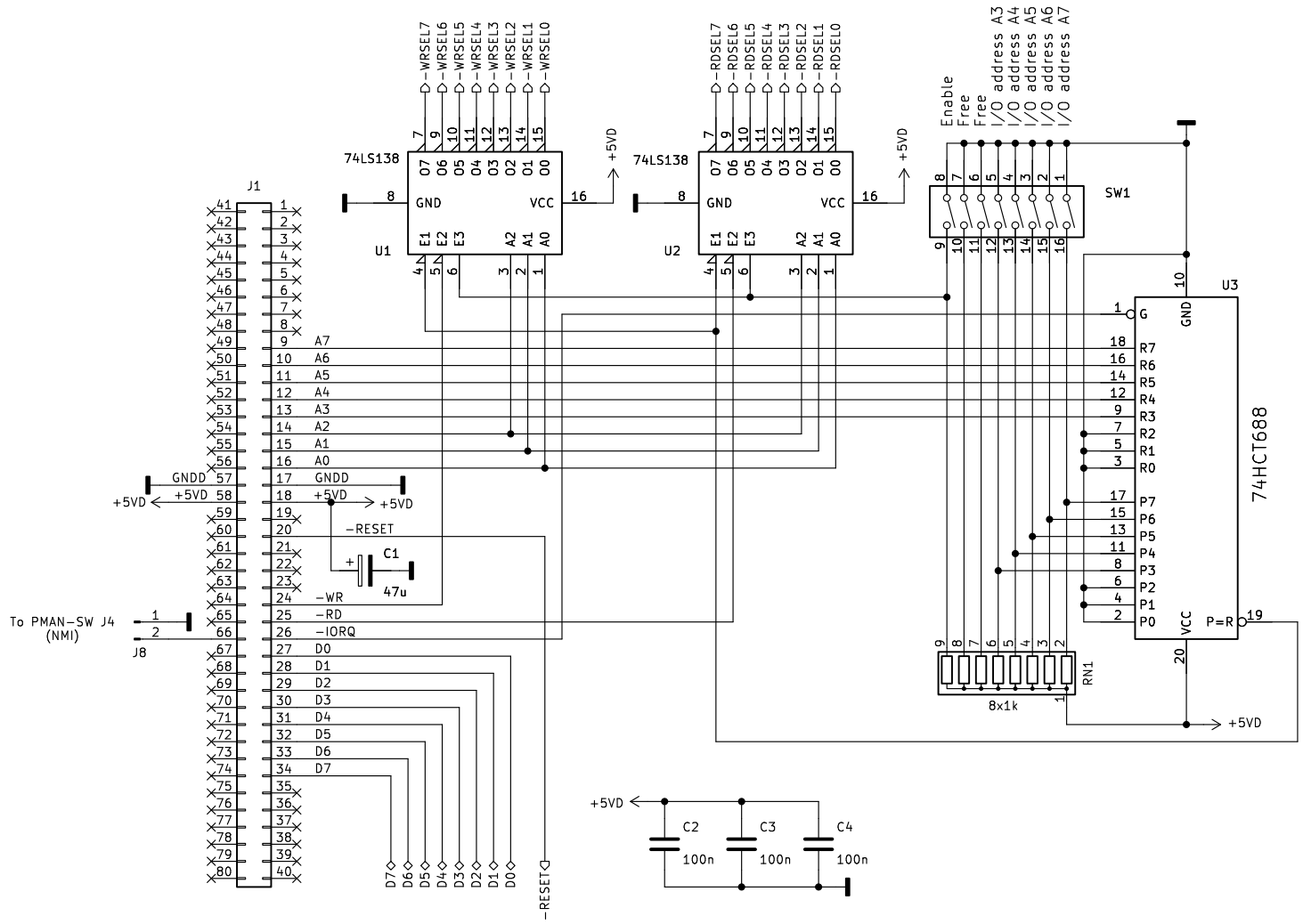

Address decoder
Zacchaeus Microcomputer
Pozsar Zsolt

Sheet: /address decoder/
File: pman−if−1.kicad_sch

Title: PMAN−IF − Manual control panel interface module

Size: A4	Date: 2026−03−27	**Rev: 1.0**
KiCad E.D.A. 9.0.6		Id: 2/4

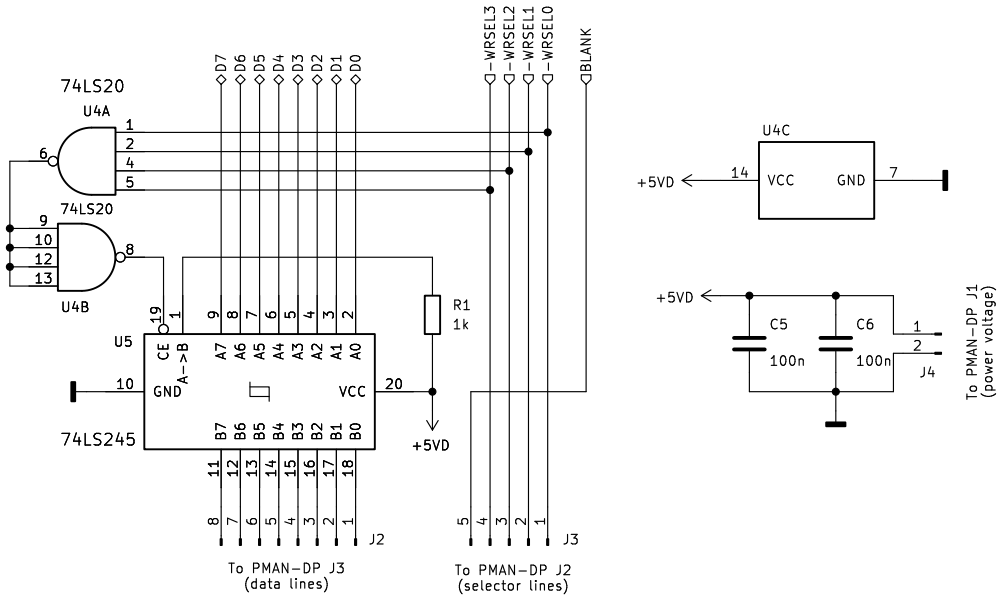

Display interface
Zacchaeus Microcomputer
Pozsar Zsolt

Sheet: /display interface/
File: pman-if-2.kicad_sch

Title: PMAN-IF - Manual control panel interface module

Size: A4	Date: 2026-03-27	**Rev: 1.0**
KiCad E.D.A. 9.0.6		Id: 3/4

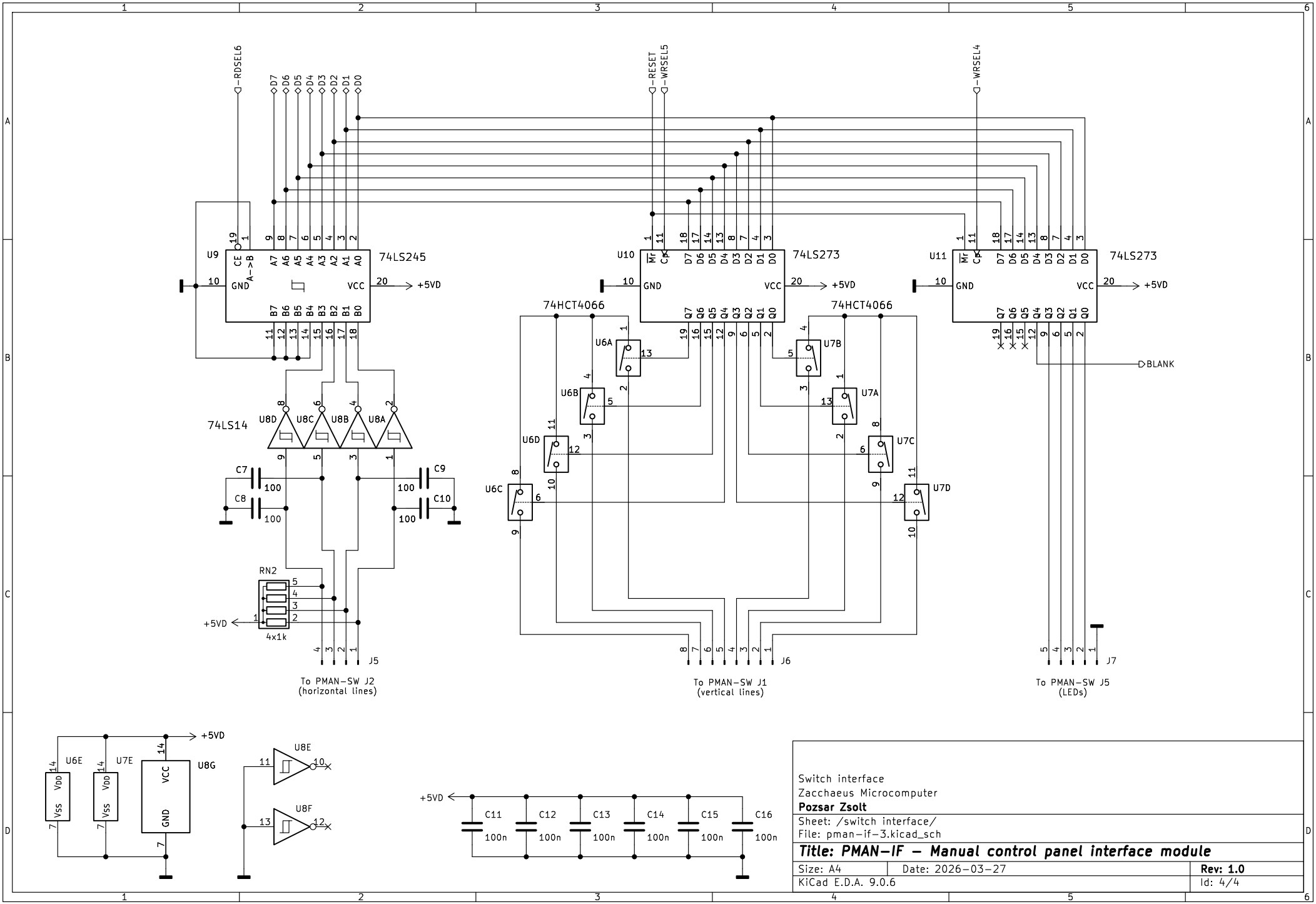

Switch interface
Zacchaeus Microcomputer
Pozsar Zsolt

Sheet: /switch interface/
File: pman-if-3.kicad_sch

Title: PMAN-IF - Manual control panel interface module

Size: A4	Date: 2026-03-27	**Rev: 1.0**
KiCad E.D.A. 9.0.6		Id: 4/4